INMP82R

Industrial
Mobile Lighting Equipment
(Area Lights)



Application

It is widely used in large-scale high-brightness mobile lighting in industrial and other professional fields such as maintenance and repair, emergency and disaster relief, accident handling, and construction etc.

Parameters

Working ambient temp.:	-20℃≤Ta≤+55℃	Recharging cycles:	500 cycles
Ingress protection:	IP65/IP66 (without speaker)	Outline dimension:	639×415×255mm (folding) / 2230mm (Rising up)
Corrosion-proof grade:	WF2	Q'ty of lamp head:	2pcs
CCT:	6500K	Lamp rotation angle:	Vertical: 115° Horizontal: 300° (duo lamps) 142° (single lamp)
Power supply mode:	Mains supply or lithium battery		
Mains voltage:	100-240V AC 50/60Hz		
Battery type:	42×21700 lithium battery	Warning light color:	Red/Green/Yellow/Blue/White (continuous or flash) Reddish blue (flash) (5 colors are optional)
Battery capacity:	21.6V / 35000mAh		
Charging time:	< 10h		

Lighting mode	Floodlight Mode	Spotlight Mode	Floodlight + Spotlight Mode
Beam angle (single lamp holder) (°)	132	27	27 (central) / 132 (outer circle)
Power (W)	55	55	2×55
Duration hour (H)	> 12	> 12	> 8
Lumen (lm)	2×2500	2×2500	2×5500
Beam distance (m)	/	200	215
Vertical angle 70° Irradiation area (m^2)	2×200	2×60	2×200
Illumination	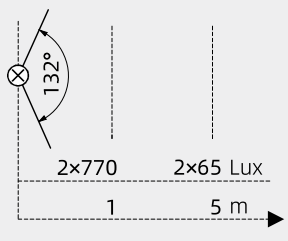	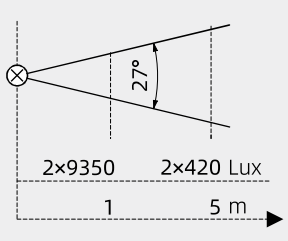	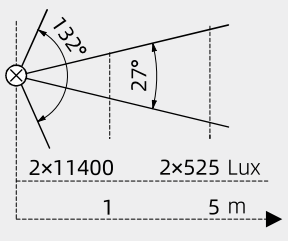

Description

Powered by lithium-ion batteries, INMP82R offers versatile lighting functionality and optional media control features for enhanced onsite coordination and communication.

- **Versatile Lighting Functionality**: Seamlessly switch between 3 lighting modes: spotlight, floodlight, and floodlight + spotlight, to meet different lighting requirements. Achieve exceptional brightness with a max illuminance of 11,000 lux, effectively covering a broad area.
- **Warning Light Capability**: Enhance safety and visibility in any situation with 11 customizable warning light modes.
- **Dual Power Options**: Utilize high-capacity lithium-ion batteries for extended and reliable performance in demanding environments. Equipped with both battery and mains power modes for uninterrupted operation and flexible power management.
- **Durability and Portability**: Constructed from durable materials with a robust design, ensuring longevity; Lightweight and portable, allowing the product to be laid flat, placed sideways, or stood upright to suit different needs.
- **Stability and Longevity**: Engineered with stability in mind, boasting a sturdy design capable of withstanding impacts; Ensures longlasting performance even in challenging conditions.
- **Dimming Capability**: Support dimming without polarization, allowing users to adjust brightness according to specific requirements.
- **Smart Self-Checking Algorithm**: Optimizing lamp operation for extended standby time, the product ensures efficient energy management and prolonged usage.
- **For Added Convenience**: Optional features include an **intuitive High-Definition control panel**, complemented by a **built-in speaker and amplifier design**. This innovative integration enables seamless communication and real-time announcements, facilitating effective onsite coordination.

Features







The lamp head can be adjusted 300° (duo lamps) and 142° (single lamp) horizontally, 115° vertically to desired lighting angle.

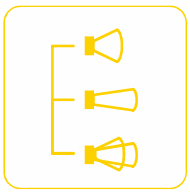

3 lighting modes:
-floodlight
-spotlight
-floodlight + spotlight
Adjust to the desired lighting mode.

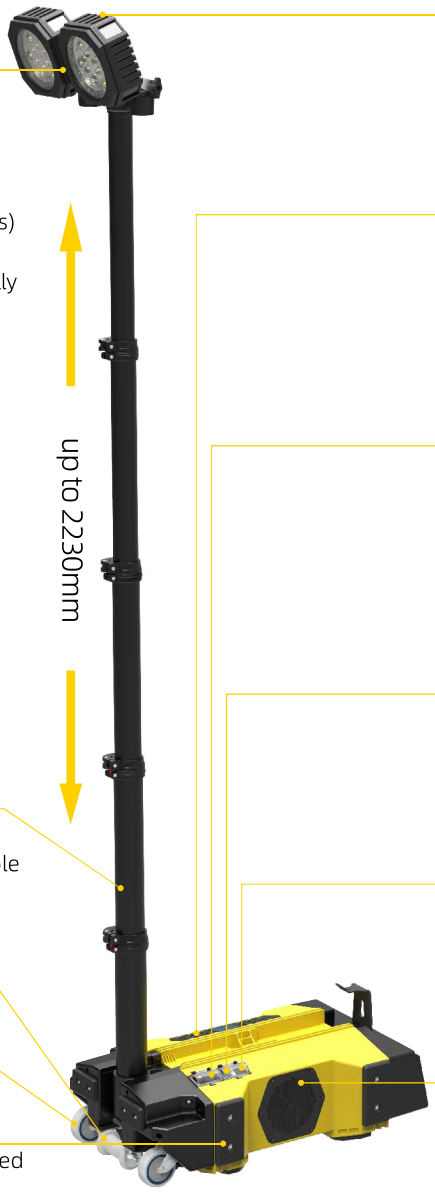

The 5-section retractable light pole locks securely at any height, ensuring customizable lighting at desired height.

Equipped with shock-resistant and silent directional wheels for easy towing.

Optional track wheels streamline towing on railways or tracks.

Protective silicone pads strategically positioned to prevent shell damage in harsh condition.

Equipped with warning light in the back of the headlight for work safety. Support customized colors and modes.



High-definition control panel: enabling lighting modes, audio play, onsite communication and recording etc. functions control.



12V/3A output DC interface × 1
3 gear control:
-battery powered
-rechargeable
-mains powered



Microphone connector × 1
USB ports × 2



It can be plugged into a USB flash drive or output 5V/2A power.



Speaker (optional) enables onsite communication & announcement and audio play.

Order specifications

Illustration	Description		Weight (kg)	Order No.
	Industrial Mobile Lighting Equipment (Area Lights) + Adapter	without speaker	20.5	INMP82R-□-□-0-01
		with speaker	21.5	INMP82R-□-□-1-01

INMP82R-□-□-1-01

- ● R-Red ● G-Green ● Y-Yellow ● B-Blue ○ W-White ● RB-Reddish blue — Code of warning light flash color
- GB EN BS ANSI AS JIS — Code of plug
- 0-without speaker, 1-with speaker — Code of multimedia (no need, not mark)

Spare parts

Illustration	Description	Weight (g)	Order No.
Shoulder carrying strap 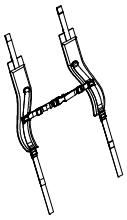	/	250	1000/11-02-05
Lithium battery pack 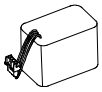	21.6V / 35000 mAh	3500	1000/05-R82-01-IN
Power supply 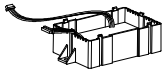	Input: 24V DC/2.5A Output: 18V DC (lighting equipment) 5V DC (warning light) 5V DC/2A (USB)	470	8282R-DR-IN
Adapter 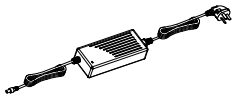	Input: 100-240V 50/60Hz, 2A Output: 24V DC, 6.25A	700	1000/12-03-□

1000/12-03-□

GB EN BS ANSI AS JIS — Code of plug

Outline dimension (unit: mm)

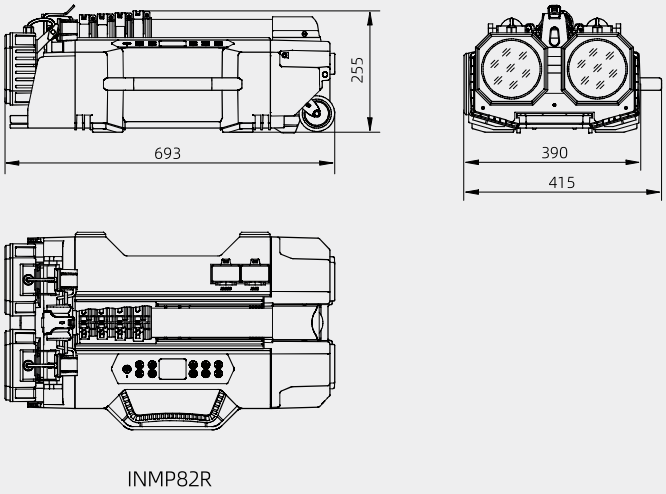

INMP82R

